DWG NO.	SH	REV
801280X0050-XXXXXX	1	P03

REVISIONS

ZONE	REV	DESCRIPTION	DATE	APPROVED
	P01	PRELIMINARY RELEASE	09/25/2024	
	P02	REVISED PIN OUT, WEIGHT AND CG	06/01/2026	
	P02	REVISED HS/TRIPOD MNT HOLE PATTERN	06/25/2026	

NOTES: UNLESS OTHERWISE SPECIFIED

1. INDICATED DIMENSIONS ARE FOR AN ARRAY SIZE OF 1280x1024@8µm.
2. CONECTOR INTERFACE: HIROSE DF40C-50DP-0.4V(51). MATING CONNECTOR HIROSE DF40C(4.0)50DS-0.4V(51). FOR PIN-OUT DESIGNATIONS SEE BOSON CAMERA USER MANUAL.
3. INDICATED ALLOWABLE TRAVEL FOR FOCUS (±0.50mm).
4. CAMERA WEIGHT NO LENS 28.2 GRAMS, LENS WEIGHT, 12.0 mm-f1.0: 25.8 GRAMS. TOTAL CAMERA WEIGHT: 54.0 GRAMS. (CAD ESTIMATE)
6. THE INDICATED SURFACE IS THE MOST OPTIMAL MOUNTING/HEATSINKING SURFACE IN ORDER TO PROVIDE THE MOST UNIFORM THERMAL PERFORMANCE OF THE BOSON HD CAMERA CORE.

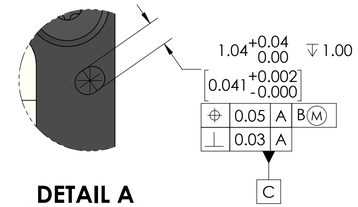

DETAIL A
SCALE 8 : 1

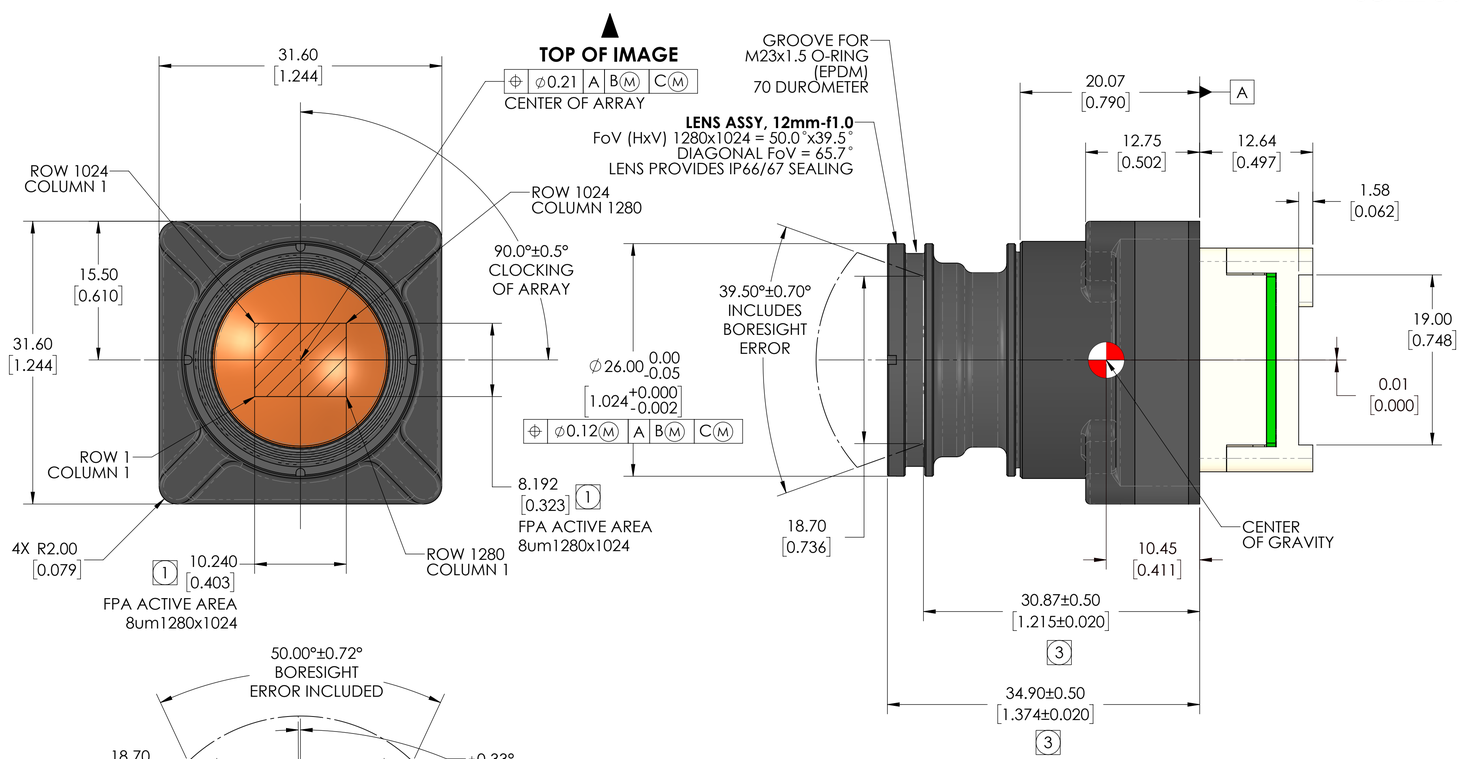

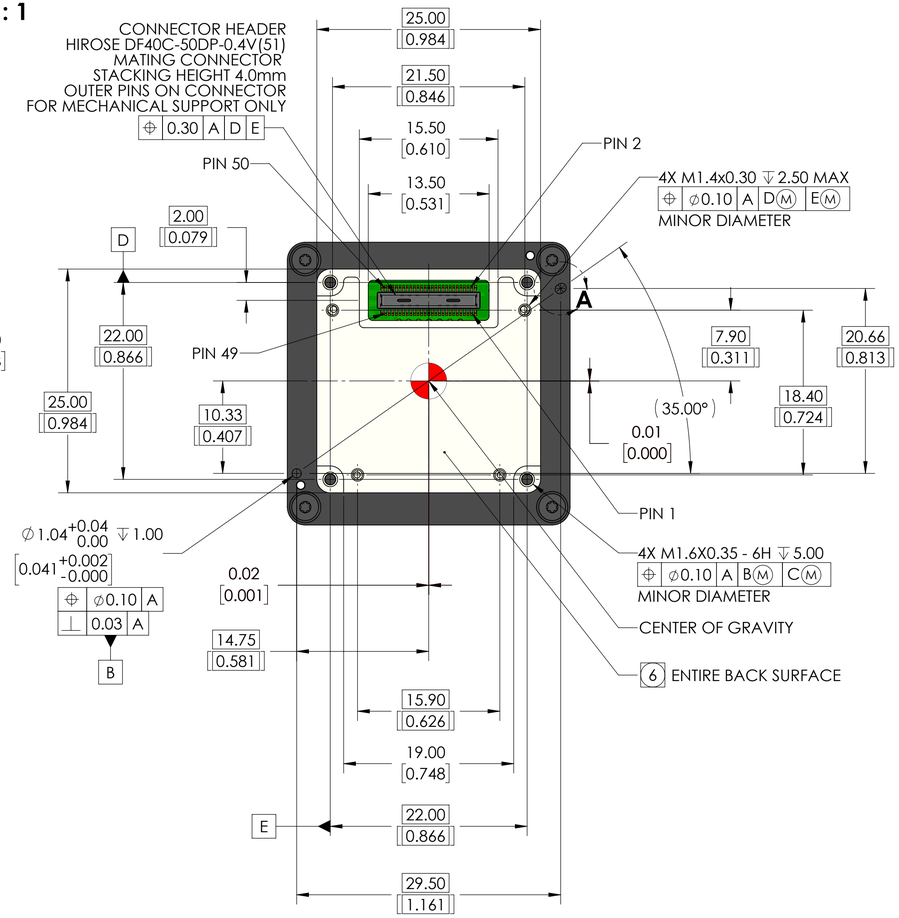

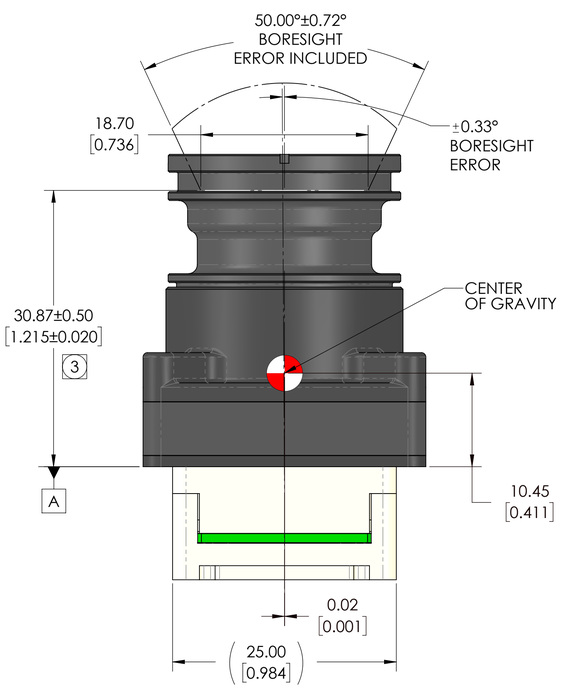

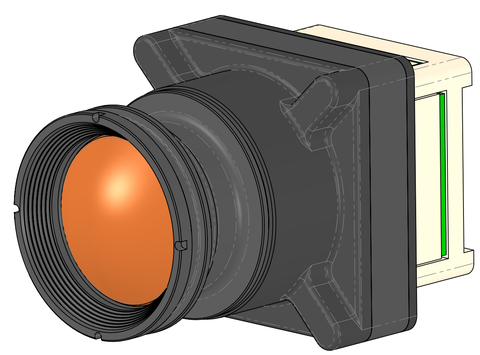

THIRD ANGLE PROJECTION

METRIC

INTERPRET DRAWING PER ASME Y14.5M-1994

UNLESS OTHERWISE SPECIFIED
SURFACE ROUGHNESS 32
.X = ±.25
.XX = ±.13
ANGULAR = ±.5°
FILLET RADII = .13 MAX

PROPRIETARY - TELEDYNE FLIR, LLC

THIS DOCUMENT CONTAINS PROPRIETARY INFORMATION TO TELEDYNE FLIR, LLC. THIS INFORMATION MAY BE MAINTAINED IN CONFIDENCE AND USED ONLY IN A MANNER CONSISTENT WITH THE DOCUMENT AND ANY EXECUTED NON-DISCLOSURE AGREEMENT AND MAY NOT BE DISCLOSED TO ANY THIRD PARTIES WITHOUT TELEDYNE FLIR'S WRITTEN CONSENT.

THIS DOCUMENT DOES NOT CONTAIN ANY EXPORT-CONTROLLED INFORMATION.

MATERIAL

FINISH

UNLESS OTHERWISE SPECIFIED ALL MEASUREMENTS ARE IN MM. ALL DIMENSIONS IN [ ] ARE INCHES. DO NOT SCALE DRAWING.

CALC WT: 38.70 GRAMS

PROJECT NO.

APPROVALS		DATE
DWN	COVINGTON	09/25/24
CHK		
DSGN		
ENG		
APP		

TELEDYNE FLIR
Teledyne FLIR, LLC
6769 Hollister Ave.
Goleta, CA 93117

TITLE **IDD, BOSON SX8, 8um 1280x1024, 12.0mm-f1.0, 50deg HFoV**

SIZE	CAGE	DWG NO.	REV
D	064Y2	801280X0050-XXXXXX	P03

SCALE 3:1 | PRINTED: 6/25/2026 | SHEET 1 OF 1

SOLIDWORKS MODEL: 80-Boson SX8 Camera Core
MODEL REVISION: A

DWG NO. 801280X0050-XXXXXX SH 1 REV P03